International Journal of Mechanical Engineering and Technology (IJMET)
Volume 7, Issue 3, May–June 2016, pp.351–359, Article ID: IJMET_07_03_032
Available online at
http://www.iaeme.com/IJMET/issues.asp?JType=IJMET&VType=7&IType=3
Journal Impact Factor (2016): 9.2286 (Calculated by GISI) www.jifactor.com
ISSN Print: 0976-6340 and ISSN Online: 0976-6359
© IAEME Publication

DESIGN AND DEVELOPMENT OF A TRANSMISSION SYSTEM FOR AN ALL TERRAIN VEHICLE

Aditya Patankar, Rohit Kulkarni, Sanket Kothawade and Sameer Ingale
Department of Mechanical Engineering,
Pimpri Chinchwad College of Engineering, Pune, India

ABSTRACT

The main function of a transmission system is to transfer the required torque and power generated by the engine to the wheels as and when required by the driver. In automobiles this is done with the help of a gearbox and a final drive alternative. The objective of this work is to design and develop a transmission system which is reliable, safe and cost effective. It should be able to transmit sufficient power and torque to generate the required traction at the wheels at any particular rpm. As the vehicle under consideration is an All-Terrain Vehicle (ATV), which is subjected to varying and rugged road conditions, the power transmission should be constant and uninterrupted. This is done with the help of a Continuously Variable Transmission (CVT) and a customized two stage speed reducer of the required reduction ratio. The main criteria such as tractive effort, acceleration performance, grade-ability, max speed of the vehicle are evaluated, based on which the reduction ratio is calculated. The two stage speed reducer and its components are designed based on this reduction ratio. Important parameters like the centre distance and diametral pitch and how they affect the design has been discussed. The design is validated using Finite Element Analysis.

Key words: Transmission System, Two Stage Speed Reducer, Tractive Effort, Reduction Ratio, CVT.

Cite this Article: Aditya Patankar, Rohit Kulkarni, Sanket Kothawade and Sameer Ingale, Design and Development of a Transmission System for an All-Terrain Vehicle. *International Journal of Mechanical Engineering and Technology*, 7(3), 2016, pp. 351–359.
http://www.iaeme.com/currentissue.asp?JType=IJMET&VType=7&IType=3

1. INTRODUCTION

Transmission system in any vehicle is used to propel the vehicle forward with the help of the torque and power generated by the engine and transferring it to the tires. The tires, which are in contact with the surface produce a reaction force called traction. Traction requirement is what governs the design of any transmission system. [2]

Design of any gearbox or gear train takes into account a number of factors like the contact ratio, diametral pitch and the centre distance value. The latter being the most important of all.

The entire dimensions of a gearbox are based on the centre distance and the torque. All the components in the gearbox have to designed or selected by considering the suitable life and factor of safety.[3]

L. Tudose, O. Buiga, D. Jucan, C. Stefanache (2008) [3], studied the optimal design of a two stage speed reducer. Various constraints such as the face width, transmission ratio and centre distance affect the optimal design of any speed reducer. The transmission ratio for the first stage is almost equal to the second stage, in any optimal design solution.

Gisbert Lechner and Harald Naunheimer (1999) [2], have given a comprehensive design procedure and analysis for any automotive transmission system. They have studied in great detail the performance characteristics, traction requirements and the transmission losses. Selection of the optimal transmission ratio based on maximum acceleration and speed requirements is also analyzed.

Omar D. Mohammad (2008) [4], presented a study which concentrates on the gear teeth engagement and stress analysis. Stress analysis is performed on the meshing of teeth when he gearing system is operated either at the non-standard centre distance or a decreased contact ratio. Many cases of changing centre distance are studied and it is clear that if the operating centre distance is increased the stresses generated in the gear tooth will be increased dependently.

2. VEHICLE DYNAMICS

While designing any vehicle it is important to study the dynamic behaviour of the vehicle after it is subjected to various road conditions. We ignore the air friction and examine load variation under the tires to determine the vehicles limits of acceleration, road grade, and kinematic capabilities. [1]

2.1. Parked car on a level road:

When a car is parked on level pavement, the normal force, F_z, under each of the front and rear wheels is given by [1]:

$$F_{z1} = \frac{1}{2} mg \frac{a_2}{l} \quad (1)$$

$$F_{z2} = \frac{1}{2} mg \frac{a_1}{l} \quad (2)$$

Where, a_1 is the distance of the cars mass centre, C, from the front axle, a_2 is the distance of c from the rear axle and l is the wheel base.

$$L = a_1 + a_2 \quad (3)$$

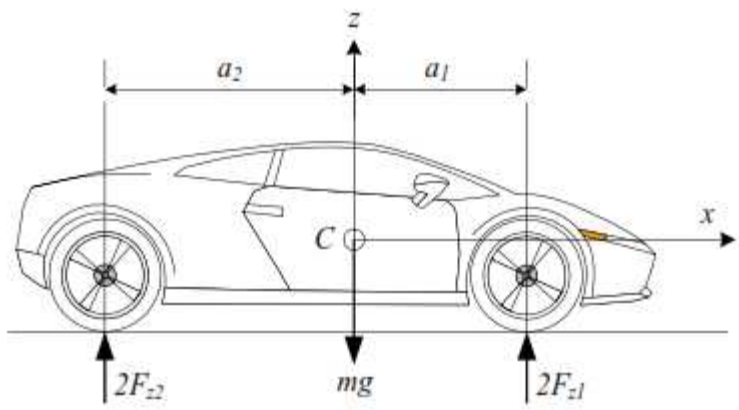

Figure 1 Free body diagram of a parked car on a level road-[1]

2.2. Maximum inclination angle

The limit for increasing ϕ is where the weight vector mg goes through the contact point of the rear tire with the ground. Such an angle is called tilting angle [1].

$$\tan\phi_M = \frac{a_1\mu_{x2}}{l-\mu_{x2}h} \quad (4)$$

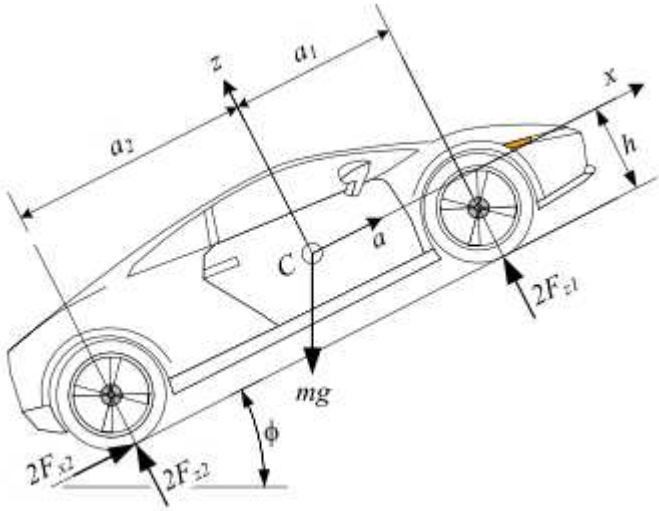

Figure 2 Maximum inclination angle for a vehicle-[1]

2.3. Maximum acceleration for a single-axle drive car

The maximum acceleration a_{rwd} for a rear wheel drive car is given by the relation [1]:

$$\frac{a_{rwd}}{g} = \frac{a_1\,\mu_x}{l-h\mu_x} \quad (5)$$

And therefore,

$$\frac{a_{rwd}}{g} \leq \frac{a_2}{h} \quad (6)$$

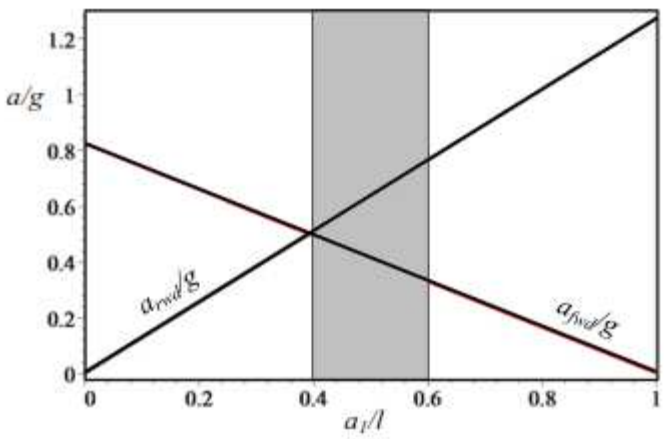

Figure 3 Rolling Resistance - [1]

2.4. Assumptions:

Mass of the vehicle: 160kg

Mass of the driver: 60kg

Static coefficient of friction (μ_{x2}): 0.9

Height of the centre of gravity (h): 19 inches = 0.4826 meters

Wheelbase: 54 inches = 1.3716 meters

Distance of the C.G from the front wheel centre (a_1): 37 inches = 0.9398 meters

Distance of the C.G from the rear wheel centre (a_2): 17 inches = 0.4318 metres

Table 1 Dynamic analysis result table

PARAMETER	VALUE	UNIT
Force under the front wheel when the car is parked on a level road (F_{z1})	339.71 N	Newton
Force under the rear wheel when the car is parked on a level road (F_{z2})	739.38 N	Newton
Maximum acceleration for a single axle drive vehicle (a_{rwd})	14.66 m/s^2	Metres per second square
Maximum inclination angle or tilting angle (ϕ_M)	56.207°	Degrees

3. PERFORMANCE CHARACTERISTICS

3.1. POWER REQUIREMENT

The anticipated driving resistance is an important variable when designing vehicle transmission. Driving resistance is made up of [2]:

- Wheel resistance or Rolling resistance F_R,
- Ari resistance F_L,
- Gradient resistance F_{st},
- Acceleration resistance F_a

3.1.1. Wheel Resistance

Wheel resistance comprises of rolling resistance, road surface resistance and slip resistance. The integral of the pressure distribution over the tire contact area gives the reaction force R and G_R is the wheel load. Because of the asymmetrical pressure distribution in the wheel contact area of the rolling wheel, the point of application of the reaction force R is located in front of the wheel axis by the amount of eccentricity e [2].

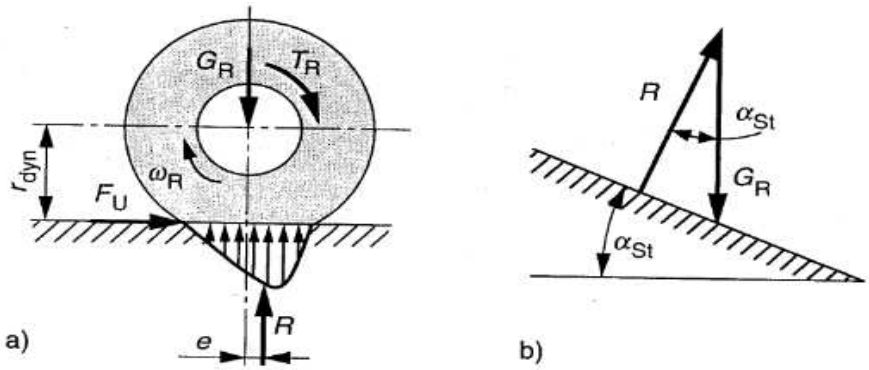

Figure 4 Rolling Resistance - [2]

$$f_r = \frac{e}{r_{dyn}} \quad (7)$$

The dimensionless proportionality factor f_r is designated as the rolling resistance.

Values of rolling resistance f_r :

- Very good earth tracks: 0.045
- Bad earth tracks: 0.160
- Loose sand: 0.150-0.130
- Smooth tarmac road: 0.010
- Bad worn road surface: 0.035

3.1.2 Adhesion Limit

There is a frictional connection between the tires and the road surface. The transmittable circumferential force FU, is proportional to the wheel load reaction force R, with a maximum value [2]

$$F_{Umax} = F_{Zmax} = \mu_H.R \quad (8)$$

The maximum traction F_Z between the tires and the road surface is constrained by the adhesion limit.

3.1.3 Air Resistance

Air flow occurs around the moving vehicle and through it for purposes of cooling and ventilation. The air resistance is made up of the pressure drag including induced drag (turbulences induced by differences in pressures), surface resistance and internal (through-flow) resistance. Drag is calculated by [2]

$$FL = \frac{1}{2}\rho LcWAv^2 \quad (9)$$

Where, ρ_L is 1.199kg/m^3 and C_W (coefficient of drag) is taken as 1.2

3.1.4 Gradient Resistance

The gradient resistance or downhill force relates to the slope descending force and is calculated from the weight acting at the centre of gravity [2].

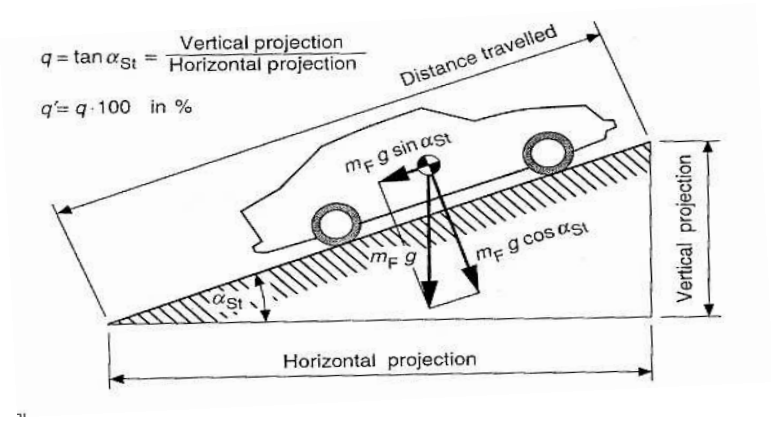

Figure 5 Free body diagram of a vehicle on an inclined plane-[2]

$F_{St} = m_F g \sin\alpha_{St}$ (10)

3.1.5 Acceleration Resistance

In addition to the driving resistance occurring in steady state motion (v = constant), inertial forces also occur during acceleration and braking. The total mass of the vehicle mF and the inertial mass of the rotating parts of the drive acceleration or brakes are the factors influencing the resistance to acceleration [2]:

$F_a = \lambda m_F a$ (11)

Where λ is the rotational inertia coefficient calculated from the given graph.

3.1.6 Total Driving Resistance:

The traction $F_{Z,B}$ required at the drive wheels is made up of the driving resistance forces described above, and is defined as:

$F_{Z,B} = F_R + F_L + F_a$ (12)

3.2. Calculation of required reduction ratio

The reduction ratio is calculated based on the above relations.

3.2.1 Assumptions

Weight Distribution: 40% - Front; 60% - Rear

Total Weight of the Vehicle (with driver): 220kg

Rolling Resistance coefficient: 0.045 and 0.160

Static coefficient of friction: 0.85

Tire dimensions: 22*7-10 (r_{dyn} = 0.276)

Coefficient of Drag: 1.2

Overall Transmission Efficiency: 0.85

Gaged GX-9 CVT: low ratio = 3.9:1; high ratio = 0.98:1

In an ATV as the traction requirement is greater the maximum ratio is selected. The largest ratio i_{Amax} often called as the stall torque ratio, depends mainly on the

specific power rating (Kw/t) of the vehicle. Two extreme conditions may be considered:

- The maximum gradient that can be climbed at an acceleration of a = 0 m/s^2
- The maximum acceleration on level

Maximum traction available $F_{Z,A}$= Maximum traction required $F_{Z,B}$

$$i_{A,\max} = \frac{r_{dyn}\, m_f g(f_R cos\alpha_{st} + sin\alpha_{st})}{T_{m,max}\eta_{tot}} \quad (13)$$

Table 2 Two Stage Speed Reducer Specifications

PARAMETER	Gaged +Custom GB
Transmission Ratio	High = 29.95
	Low = 6.89
Tractive Effort	High = 1722.82 N
	Low = 397.57 N
Total resistance	337.51 N
Acceleration	5.72 m/s^2
Grade	38.05^0

4. DESIGN OF TWO STAGE SPEED REDUCER

4.1. Centre Distance Characteristic Value

The centre distance C of a transmission is its most important parameter [3].The smaller the centre distance can be with a given output torque T_2, smaller the overall dimensions of the gearbox. An overall centre distance of 150-180mm and centre distance of 60-100mm for individual ratios was fixed and iterations were performed

From the centre distance the value of diametral pitch can be calculated. As the module is the inverse of diametral pitch the module is found out and factor of safety is calculated using AGMA 2001-D04 procedure.

$$d = \frac{2C}{G+1} \quad (14)$$

Where C is the centre distance from input to output and G is the overall reduction ratio.

4.2. Design of Gears and Shaft

The material selected for the shaft and gears is 20MnCr5 as it is the most easily available material and commercially feasible. The gears will be manufactured by hobbing cutter with the pressure angle of 20 degrees. As the pressure angle is 20 degrees the minimum number of teeth on the pinion is 18. After consideration of the hunting tooth in the gears the reduction ratio is changed from 7.8 to 7.68. The overall reduction ratio is split into two stages using the formula:

$$i_1 = 0.76*iT0^{.65};\ i2= i_{T/}i_1 \quad (15)$$

Thus the first stage reduction ratio is 2.61 and the second stage reduction ratio is 2.94. In AGMA 2001-D04 the gears are designed for 10^7 stress cycles and a reliability of 0.99.Similarly the shafts were designed according to the ASME standard

procedure. The bearings required for the two stage speed reducer were selected using the equivalent dynamic load and the load life relationship. The gears are mounted on the shaft with the help of involute splines and held in place using type A external circlips.

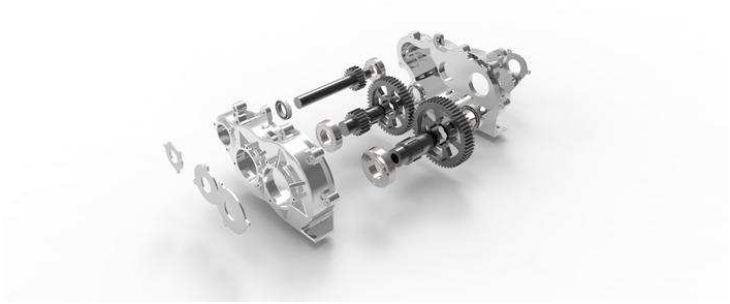

Figure 6 The proposed two stage speed reducer design

Table 3 Two Stage Speed Reducer Specifications

PROPOSED GEARBOX SPECIFICATIONS	
Customized 2-stage Speed Reducer	Overall Ratio : 7.68 First Stage : 2.61 Second Stage : 2.94 Gear Type : Spur Gear Material : 20MnCr5 Bearing Type : DGBB Lubricant : ISO VG 68 Casing Material : Al 2014

5. FINITE ELEMENT ANALYSIS

The FEA of the components was done using Hypermesh. The gears were subjected to the maximum tangential load acting on a single tooth [4]. The shafts were subjected to the maximum torque and resultant load acting on the point.

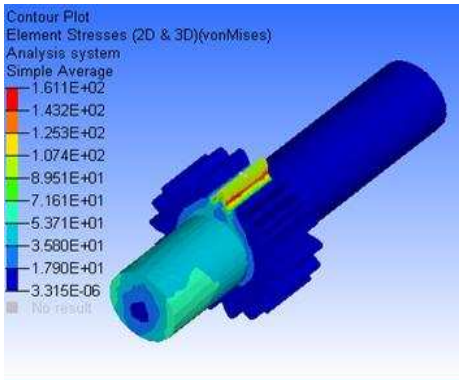

Figure 7 FEA of pinion

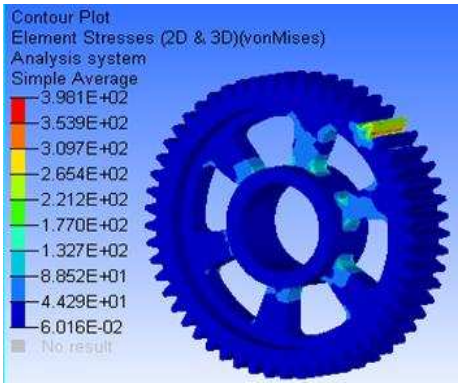

Figure 8 FEA of gear

Table 5 Results of FEA

COMPONENT	σ_{max} (MPa)	FOS
Pinion	161.1	2.91
Gear	398.1	1.52

6. CONCLUSION

The following comments could be concluded:

1. The position of the centre of gravity in any vehicle affects the dynamic performance like the maximum tilting angle and maximum acceleration. These dynamic parameters are independent of the engine performance and specifications and depend only upon the constructional details of the vehicle.
2. The reduction ratio for a two stage speed reducer used as a final drive alternative can be calculated from the performance characteristics and traction requirements.
3. For an optimal design solution the transmission ratio in the first stage should be almost equal to the second stage. Also the centre distance characteristic value should be fixed initially according to the space constraints.
4. The factor of safety of around 1.5 is sufficient for the design of the two stage speed reducer.

REFERENCES

[1] Jazar, R. Vehicle Dynamics, Springer, First Indian reprint, 2013

[2] Lechner, G. and Naunheimer, H. Automotive Transmissions, Springer-Verlag Berlin Heidelberg 1999

[3] Tudose, L. Buiga, O. Jucan, D. Stefanache, C. Optimal Design of Two Stage Speed Reducer, *MACMESE*, Romania (74-79), 2008

[4] G. Vijay Prakash, Analysis of Voice Controlled Vehicle Chair with Drowsy Detection. *International Journal of Mechanical Engineering and Technology*, 5(4), 2014, pp. 243–249.

[5] Apoorv Prem, Articulated Vehicle Systems. *International Journal of Mechanical Engineering and Technology*, 5(7), 2014, pp. 36–41.

[6] K. Kishore Kumar, M.Siva Krishna, D.Ravitej And D.Bhavana, Design of Automatic Guided Vehicles. *International Journal of Mechanical Engineering and Technology*, 3(1), 2014, pp. 24–32.

[7] Mohammad, D. O. Effect of Centre Distance Change on Gear Teeth Engagement and Stress Analysis, *College of Engineering/University of Mosul*, 2008.